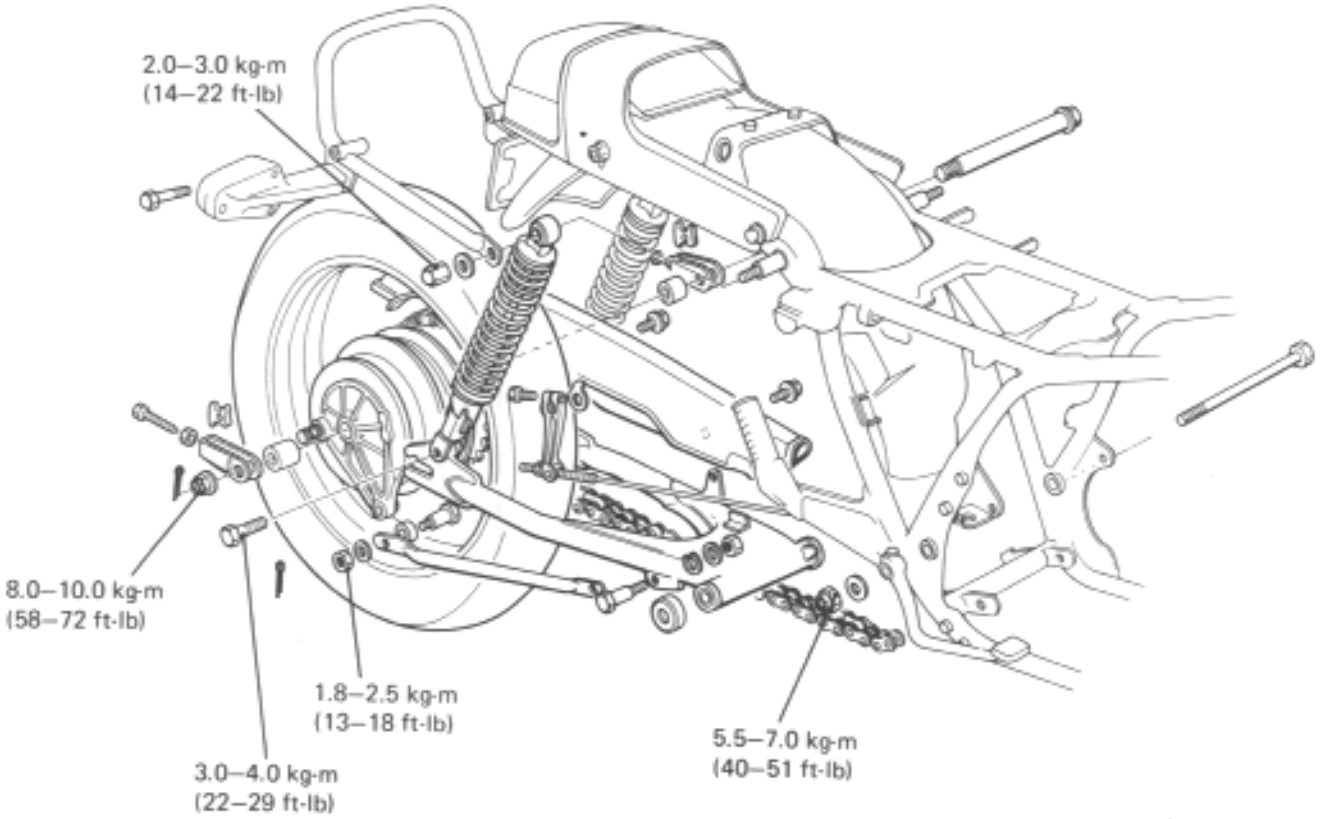

Date of Issue: August, 1978

SERVICE INFORMATION

GENERAL INSTRUCTIONS

The shock absorbers are mounted with the gas-filled damper on bottom. This reduces unsprung weight.
Do not try to disassemble the gas-filled damper.
Never ride on the rim or try to bend the wheel.

SPECIAL TOOLS

Common Tools

Bearing Driver Handle (A)	07749–0010000
Bearing Driver Outer (62 x 68 mm)	07746–0010500
Bearing Driver Outer (52 x 55 mm)	07746–0010400
Bearing Driver Pilot (20 mm)	07746–0040500
Bearing Driver Pilot (25 mm)	07746–0040600
Rear Shock Absorber Compressor	07959–3290001
Retainer Wrench Body	07710–0010400
Retainer Wrench (A)	07710–0010100
Retainer Wrench (C)	07710–0010300

TORQUE VALUES

Rear shock absorber	
Upper	2.0– 3.0 kg-m (14–22 ft-lb)
Lower	3.0– 4.0 kg-m (22–29 ft-lb)
Driven sprocket	8.0–10.0 kg-m (58–72 ft-lb)
Rear axle	8.0–10.0 kg-m (58–72 ft-lb)
Swing arm pivot bolt	5.5– 7.0 kg-m (40–51 ft-lb)
Rear brake torque link nut	1.8– 2.5 kg-m (13–18 ft-lb)

SPECIFICATIONS

		STANDARD	SERVICE LIMIT
Axle runout		———	0.2 mm (0.01 in)
Rear wheel rim runout	Radial	———	2.0 mm (0.08 in)
	Axial	———	2.0 mm (0.08 in)
Shock absorber spring free length		244.5 mm (9.6 in)	237.2 mm (9.5 in)
Swing arm bushing	I.D.	21.500–21.552 mm (0.8465–0.8485 in)	21.7 mm (0.854 in)
Swing arm collar	O.D.	21.427–21.460 mm (0.8436–0.8449 in)	21.4 mm (0.843 in)

TROUBLESHOOTING

Wobble or vibration
1. Distorted rim
2. Loose wheel bearing
3. Loose or distorted spokes
4. Faulty tire
5. Loose axle
6. Tire pressure incorrect
7. Swing arm bushing worn

Soft suspension
1. Weak spring
2. Shock absorbers improperly adjusted

Hard suspension
1. Shock absorbers improperly adjusted
2. Bent shock absorber

Suspension noise
1. Shock case binding
2. Loose fasteners

Date of Issue: August, 1978

REAR WHEEL

REAR WHEEL REMOVAL

Place the motorcycle on its center stand.
Loosen the drive chain adjuster lock nuts and bolts.
Disconnect the rear brake torque link by removing the cotter pin and nut.
Remove the rear brake adjusting nut and disconnect the brake rod.
Remove the cotter pin from the rear axle and loosen the nut.
Pull the adjusters down, push the wheel forward and remove the drive chain from the drive sprocket.
Remove the rear wheel.
Remove the rear axle.

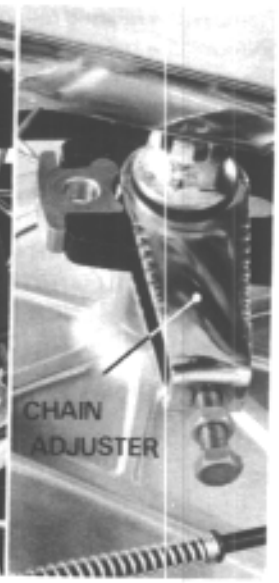

REAR WHEEL DISASSEMBLY

Loosen the driven sprocket nuts.

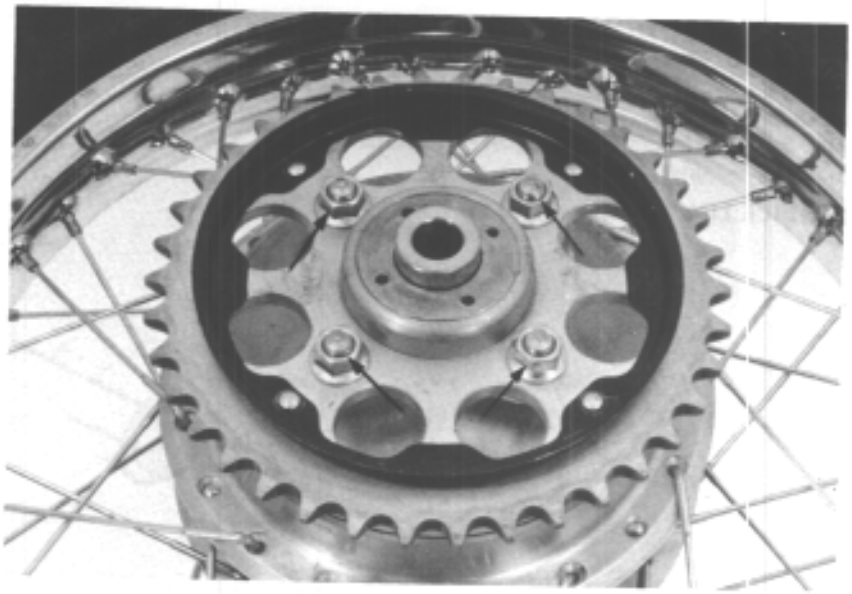

Remove the driven flange from the wheel hub.
Remove the driven sprocket.

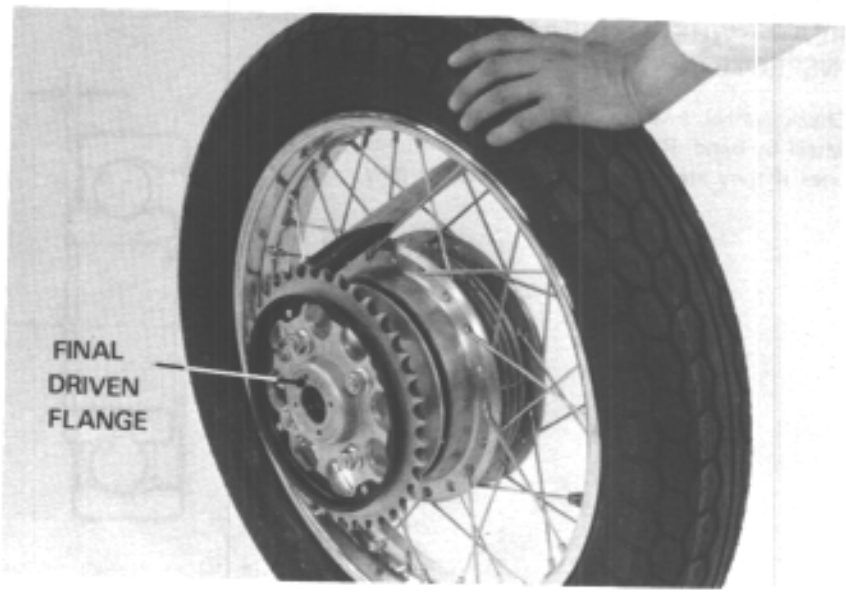

Remove the bearing retainer.
Remove the bearings and distance collar from the rear wheel hub.
Remove the bearing from the final driven flange.

RETAINER WRENCH BODY
07710–0010400
RETAINER WRENCH (A)
07710–0010100
RETAINER WRENCH (C)
07710–0010300

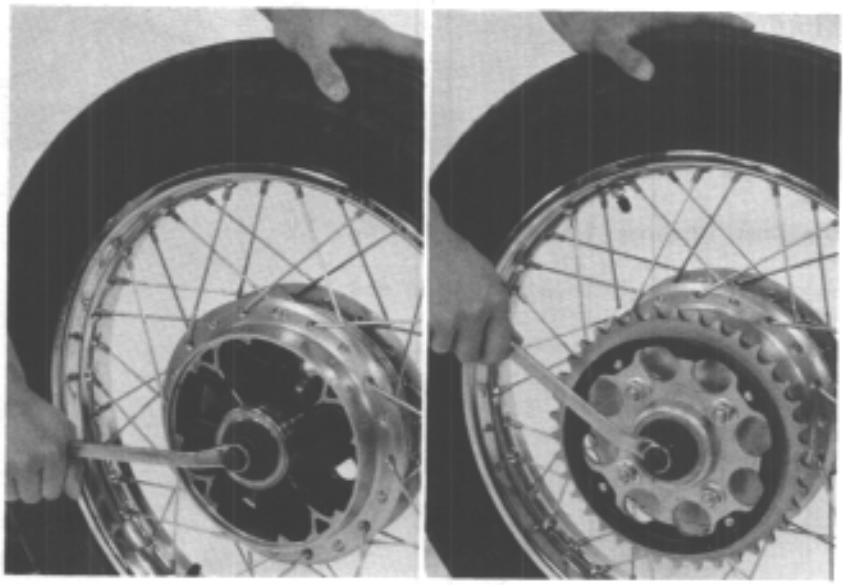

AXLE INSPECTION

Set the axle in V blocks and read the axle runout.
The actual axle runout is 1/2 of TIR (total indicator reading).

SERVICE LIMIT: 0.2 mm (0.01 in)

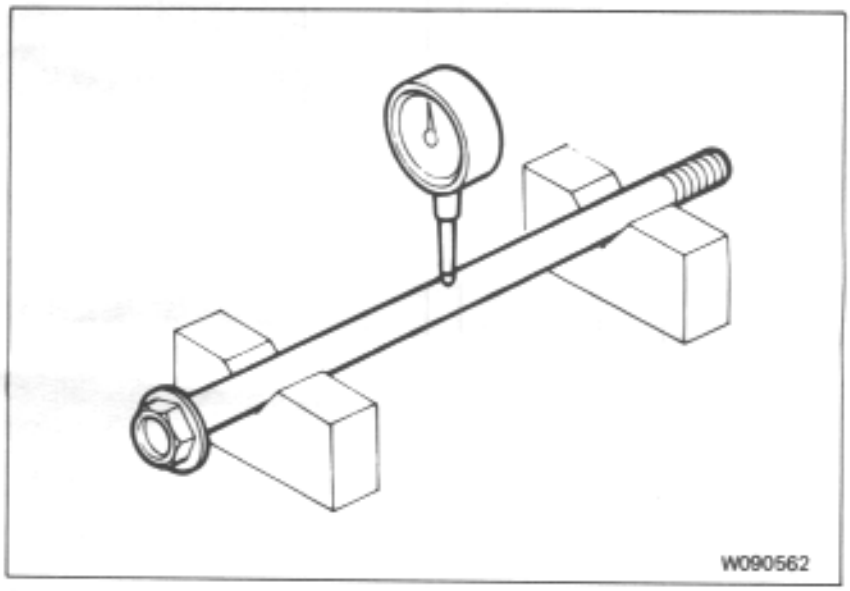

REAR WHEEL BEARING PLAY INSPECTION

Check wheel bearing play by rotating the wheel by hand. Replace the bearings with new ones if they are noisy or have excessive play.

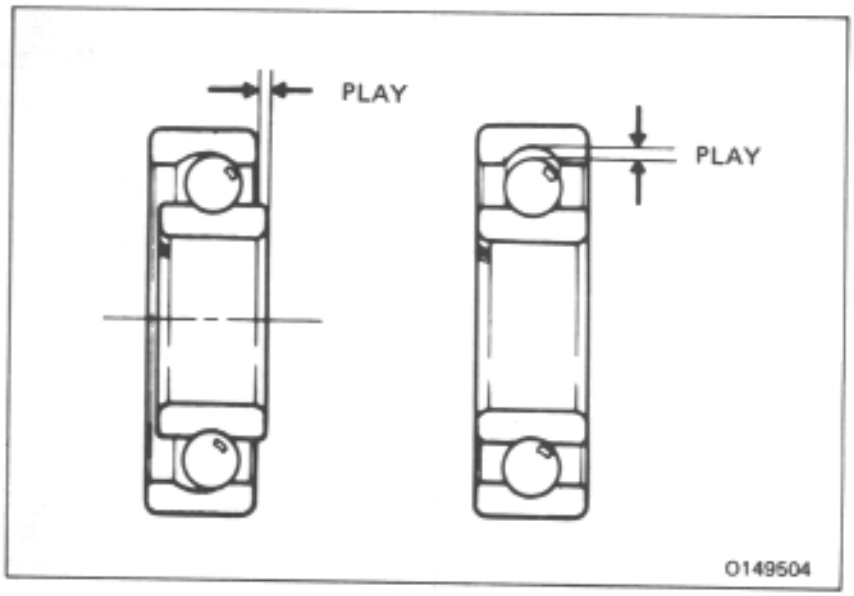

Date of Issue: August, 1978

REAR WHEEL RIM RUNOUT INSPECTION

Check the rim for runout by placing the wheel in a truing stand. Spin the wheel slowly, and read the runout using a dial indicator.

SERVICE LIMITS:
RADIAL RUNOUT: 2.0 mm (0.08 in.)
AXIAL RUNOUT: 2.0 mm (0.08 in.)

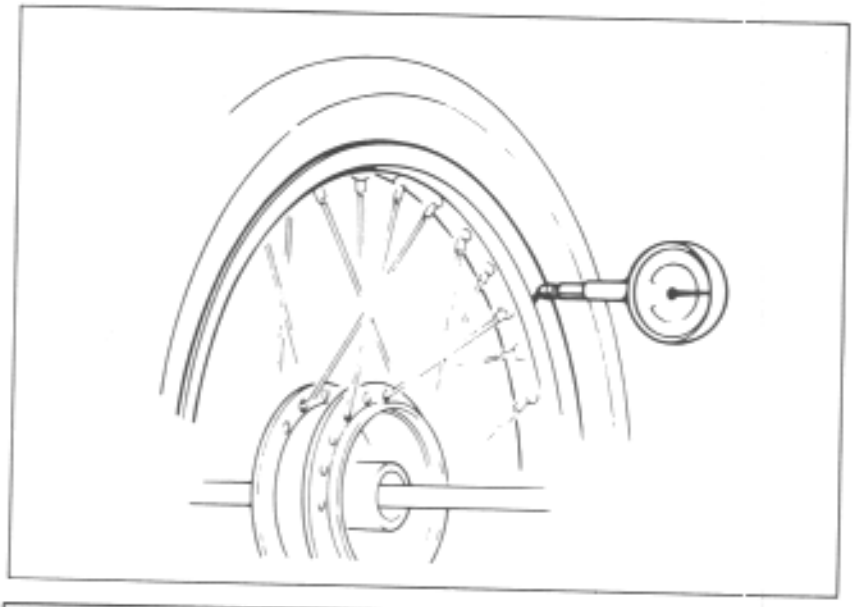

FINAL DRIVEN SPROCKET INSEPCTION

Check the condition of the final driven sprocket teeth.
Replace the sprocket if worn or distorted.

NOTE

If the final driven sprocket requires replacement, inspect the drive chain and drive sprocket. (See 3—16)

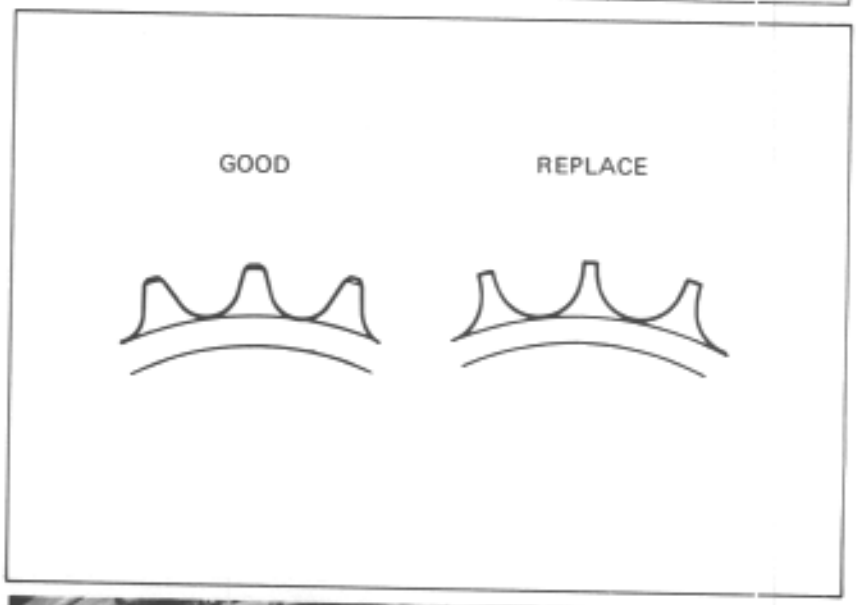

DAMPER RUBBER INSPECTION

Replace the damper rubbers if they are damaged or deteriorated.

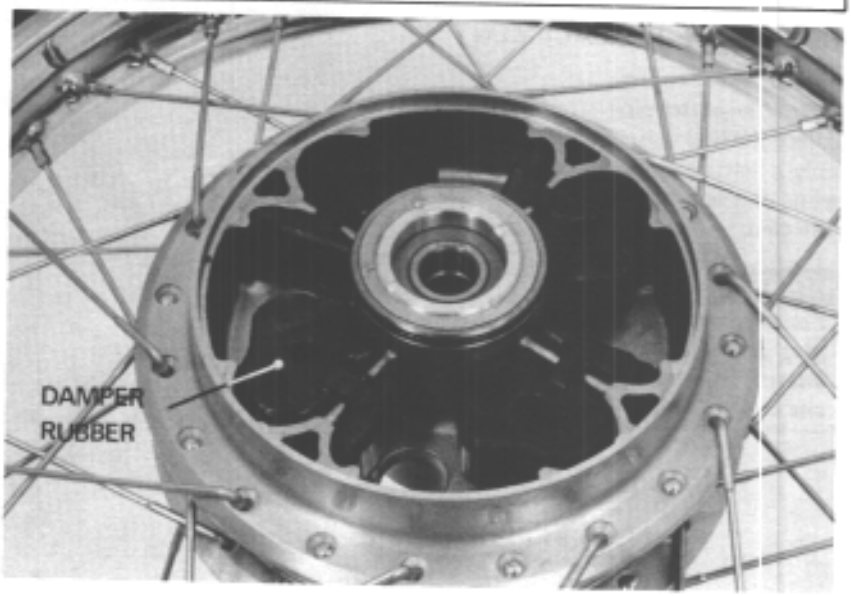

BRAKE LINING THICKNESS INSPECTION

Measure the brake lining thickness.

SERVICE LIMIT: 2.0 mm (0.08 in)

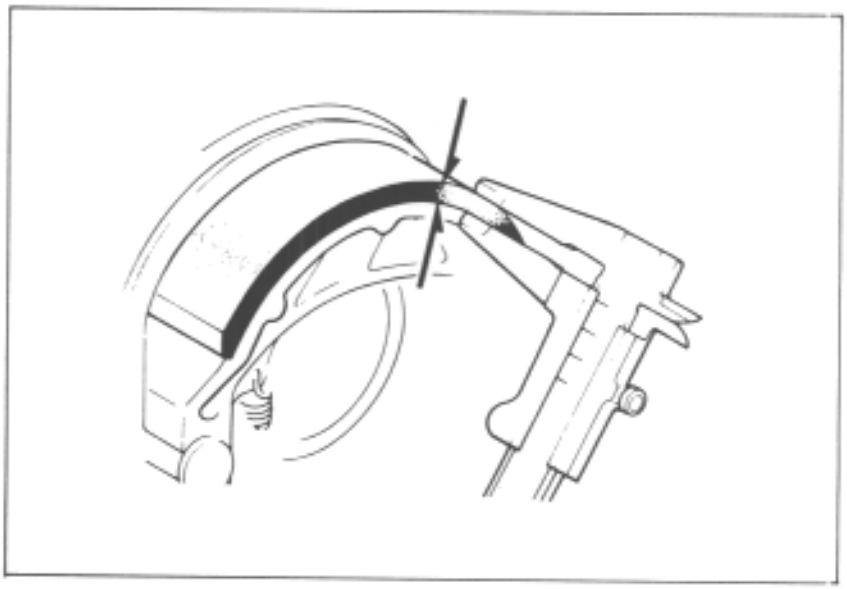

BRAKE DRUM I.D. INSPECTION

Measure the brake drum inside diameter.

SERVICE LIMIT: 181 mm (7.1 in)

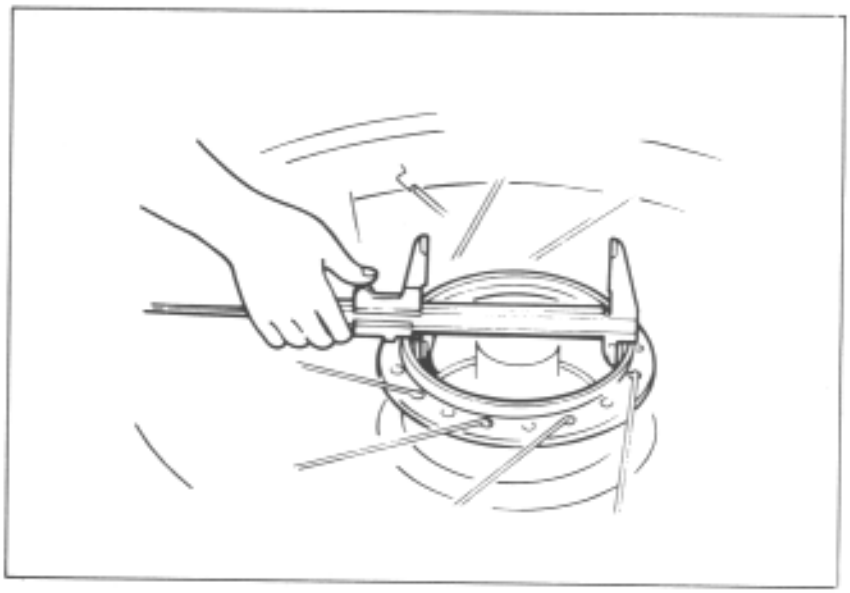

BRAKE SHOE REPLACEMENT

Remove the brake arm.
Remove the cotter pins.
Replace the brake shoes with new ones.
Apply a light coat of grease to the faces of the anchor pins and brake cam and groove in the brake cam.

WARNING

Contaminated brake linings reduce stopping power. Keep grease off the brake linings. Wipe excess grease off the cam and anchor pins.

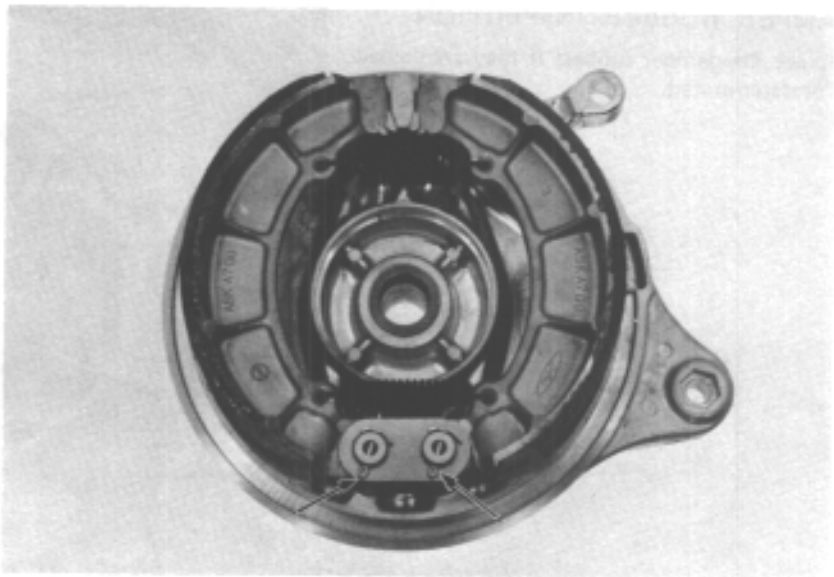

Date of Issue: August, 1978

Aligh the punch marks on the brake cam and brake arm.
Tighten the brake arm bolt.

TORQUE: 2.4–3.0 kg-m (17-22 ft-lb)

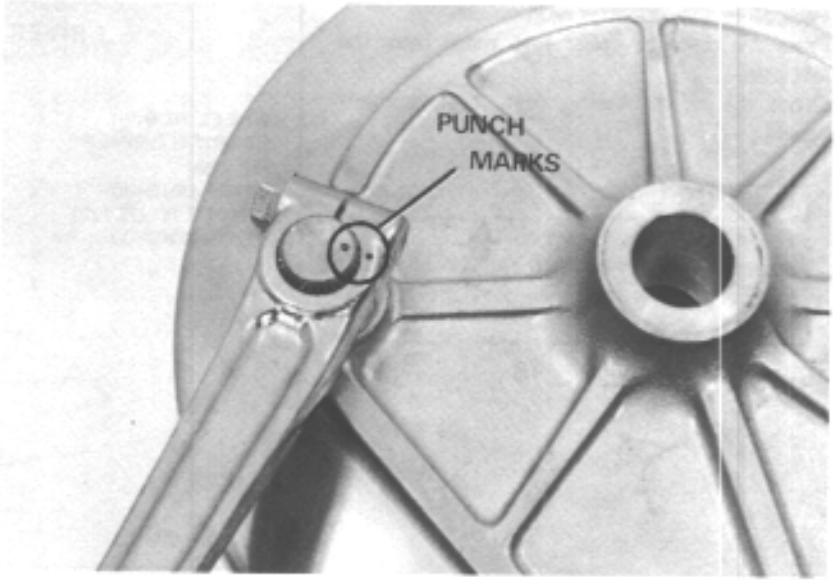

REAR WHEEL ASSEMBLY

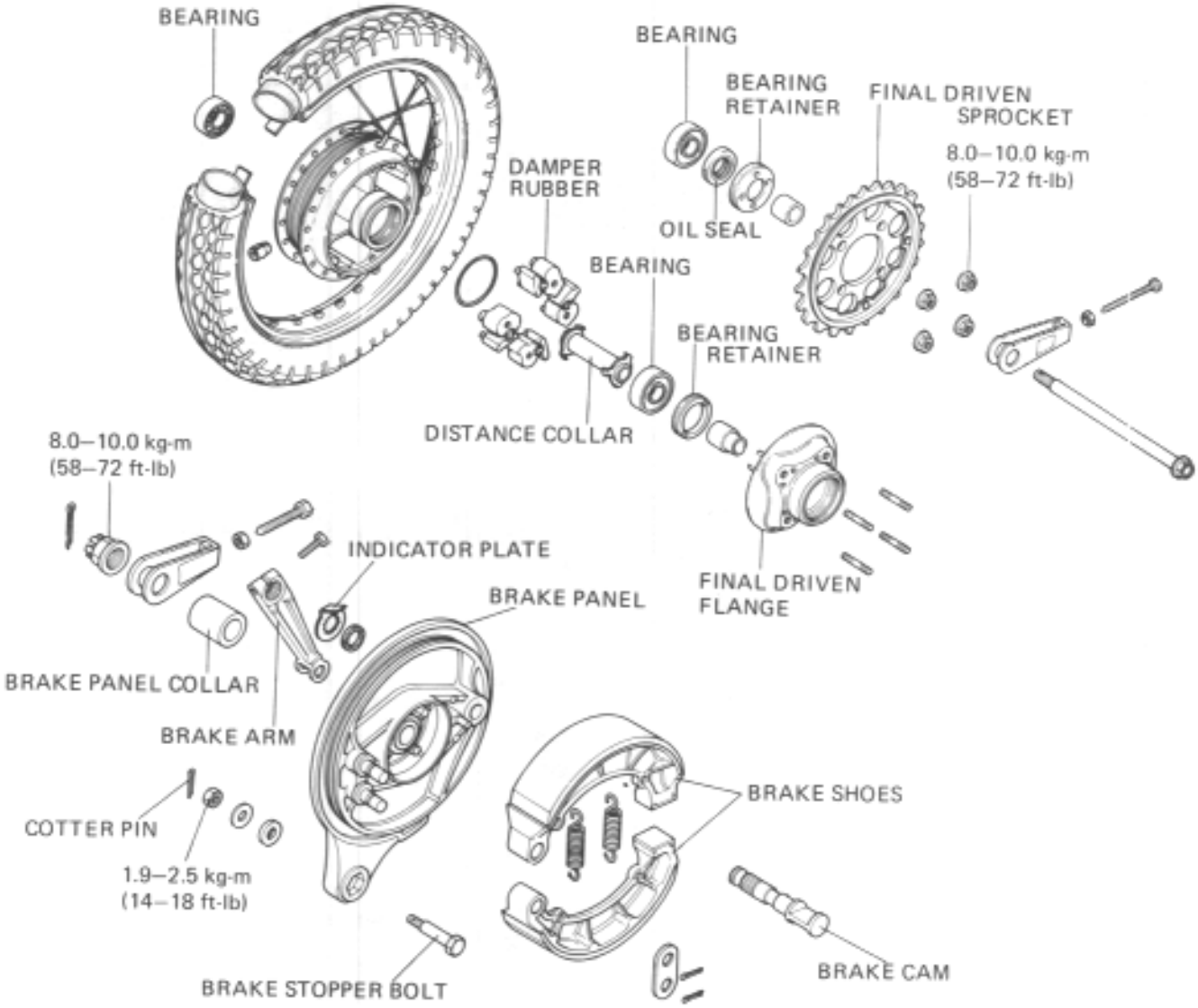

Pack all bearing cavities with grease.
Press the distance collar into place from the left side.
Drive the right bearing first, then the left bearing.

> *CAUTION*
> *Drive the bearings squarely.*
> *Install the bearings with the sealed end facing out, making sure they are fully seated.*

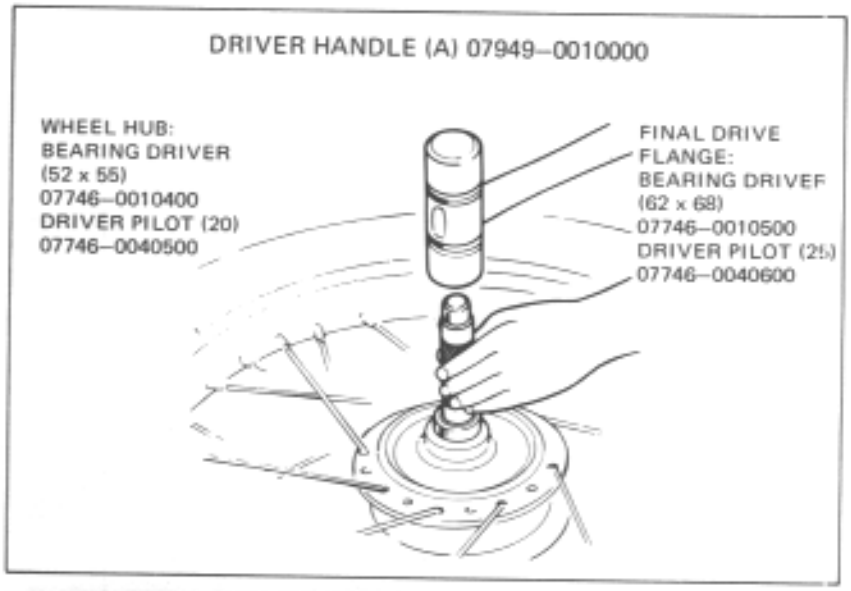

Install the bearing retainer with the same tool that was used to remove it. Peen it to the hub.

> NOTE
> Check the condition of the bearing retainer.
> Replace the retianer if the threads are damaged.

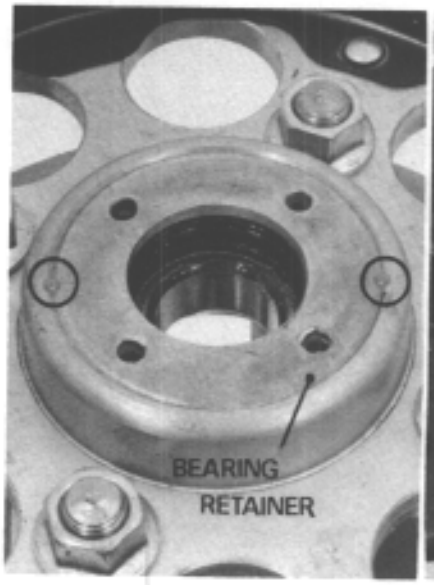

Install the final driven sprocket.

TORQUE: 8.0–10.0 kg-m (58–72 ft-lb)

Date of Issue: August, 1978

REAR WHEEL INSTALLATION

Install the rear wheel in the reverse order of removal.

NOTE

After installing the wheel, apply the brakes several times, and then check to be sure that the wheel rotates freely. Recheck the installation if the brake drags or wheel does not rotate freely.

Use a new cotter pin for securing the axle nut.

TORQUE: 8.0–10.0 kg-m (58–72 ft-lb)

Use a new cotter pin for securing the rear brake torque link.

TORQUE: 1.8–2.5 kg-m (13–18 ft-lb)

Adjust drive chain free play. (See 3-16)
Adjust the rear brake. (See 3-18)

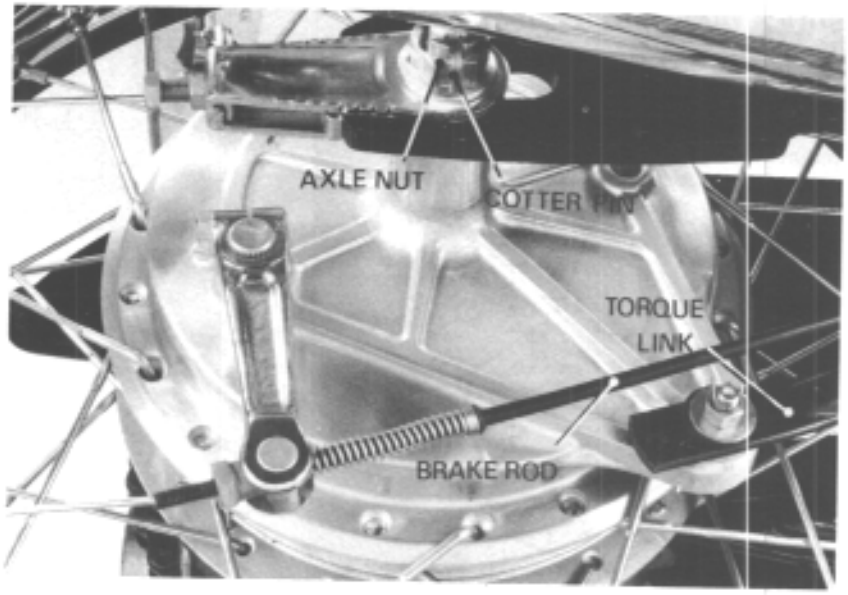

SHOCK ABSORBER

SHOCK ABSORBER REMOVAL

Remove the mufflers.
Remove the rear carrier pipe attaching bolts.
Remove the upper and lower shock absorber mounting bolts and nuts, and remove the shock absorbers.

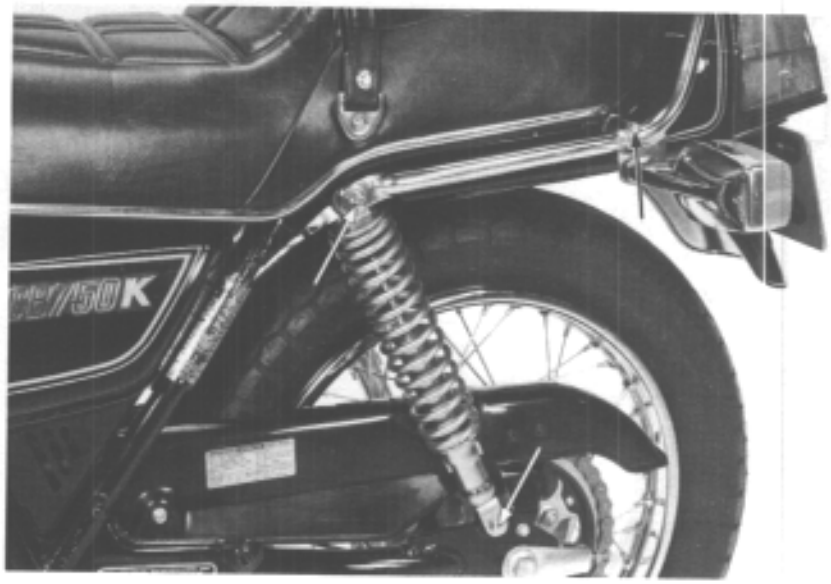

SHOCK ABSORBER DISASSEMBLY

Compress the spring just enough to remove the lock nut.
Loosen the lock nut and remove the upper mount.

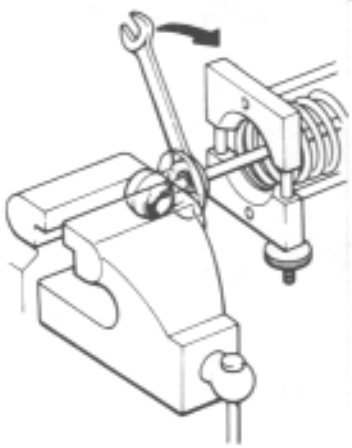

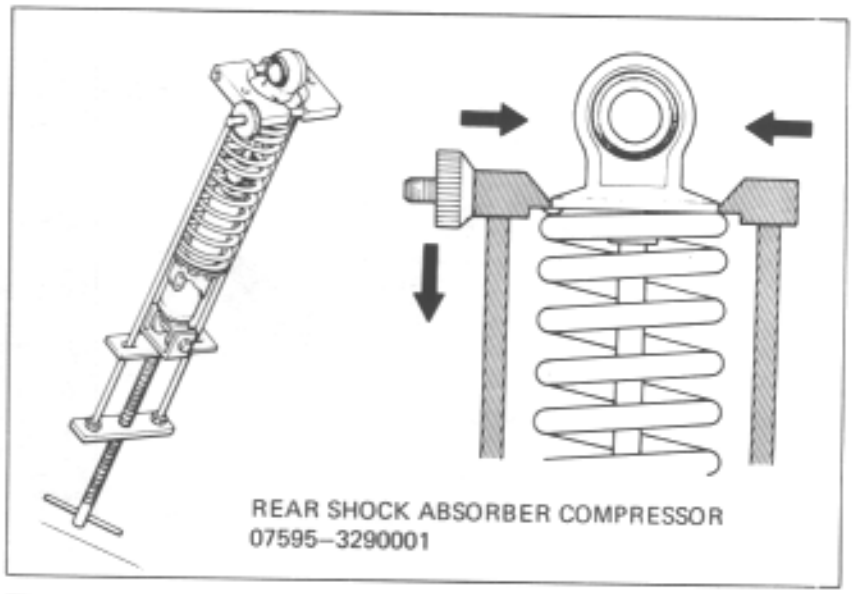

SHOCK ABSORBER SPRING FREE LENGTH

Disassemble the unit.
Measure the free length of the spring. Inspect the shock body for oil leaks.

SERVICE LIMIT: 237.2 mm (9.5 in)

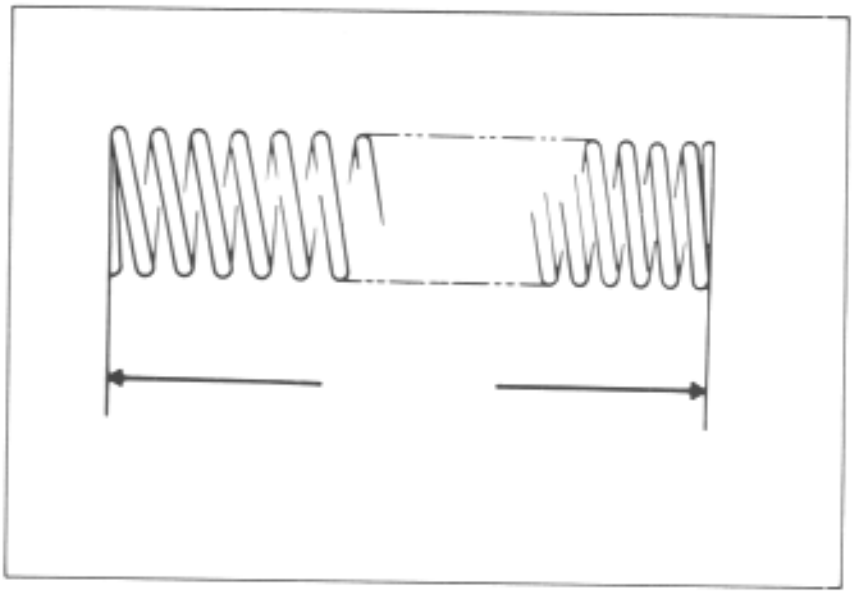

SHOCK ABSORBER ASSEMBLY

NOTE

Install the spring with the tight coils at the bottom.

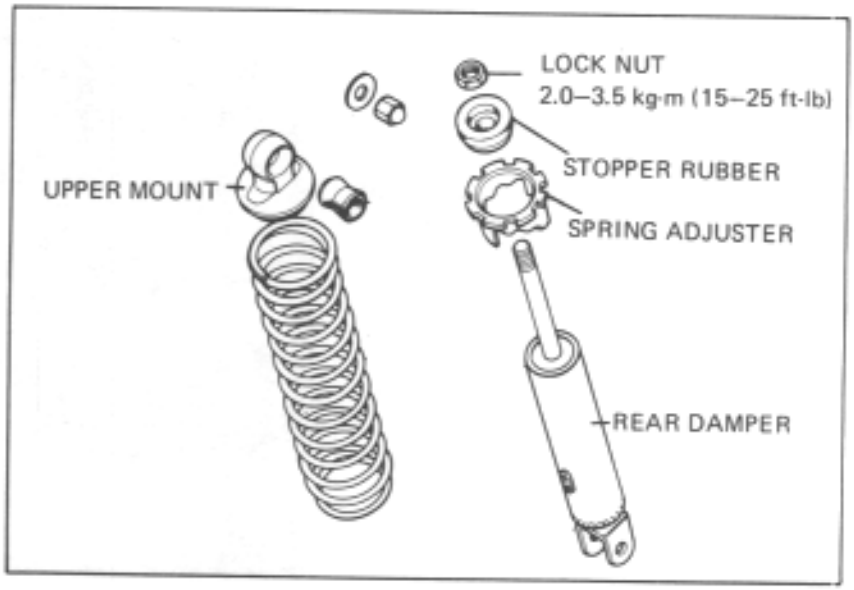

Date of Issue: August, 1978

NOTE

Apply a locking agent to the lock nut at time of assembly.

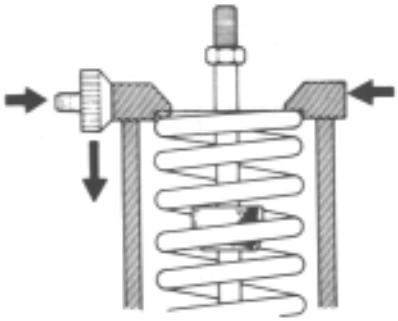

REAR SHOCK ABSORBER COMPRESSOR
07595–3290001

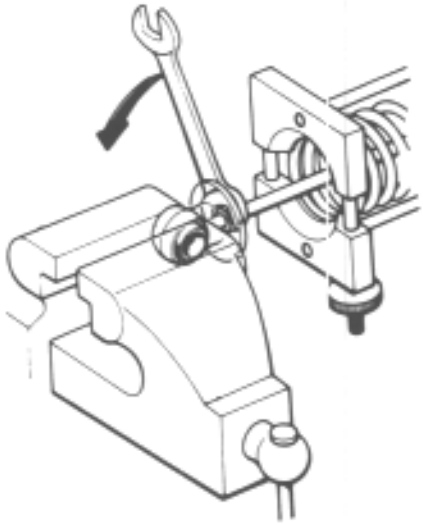

SHOCK ABSORBER INSTALLATION

Tighten the shock absorber bolts and nuts.

TORQUE:
UPPER: 2.0–3.0 kg-m (14–22 ft-lb)
LOWER: 3.0–4.0 kg-m (22–29 ft-lb)

Install the muffler.

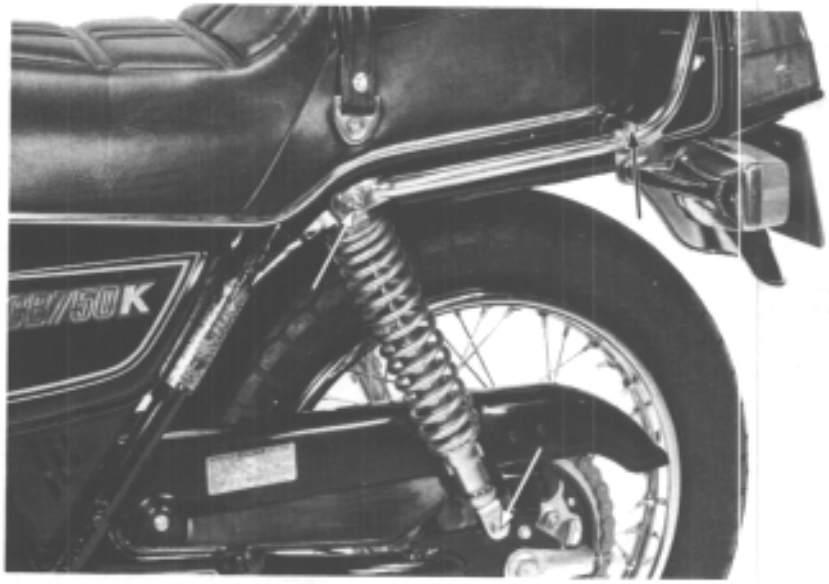

Adjust the right and left absorbers equally with the spring adjuster.

Check shock absorber operation after installation.

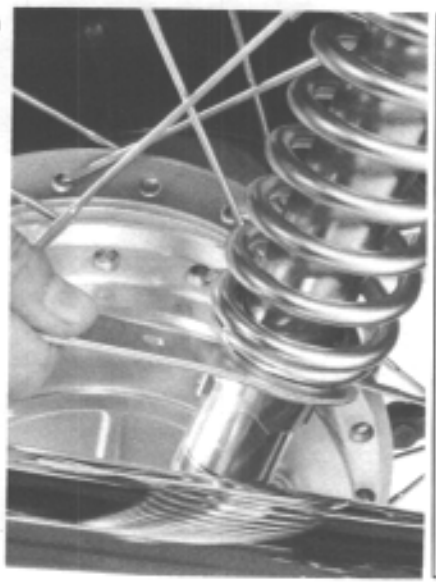

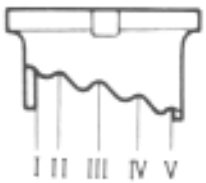

STANDARD : I

SWING ARM

SWING ARM REMOVAL

Remove the mufflers.
Remove the left crankcase rear cover.
Remove the rear wheel. (Page 14-3)
Remove the drive chain guard.
Remove the right and left shock absorbers.
Remove the swing arm.

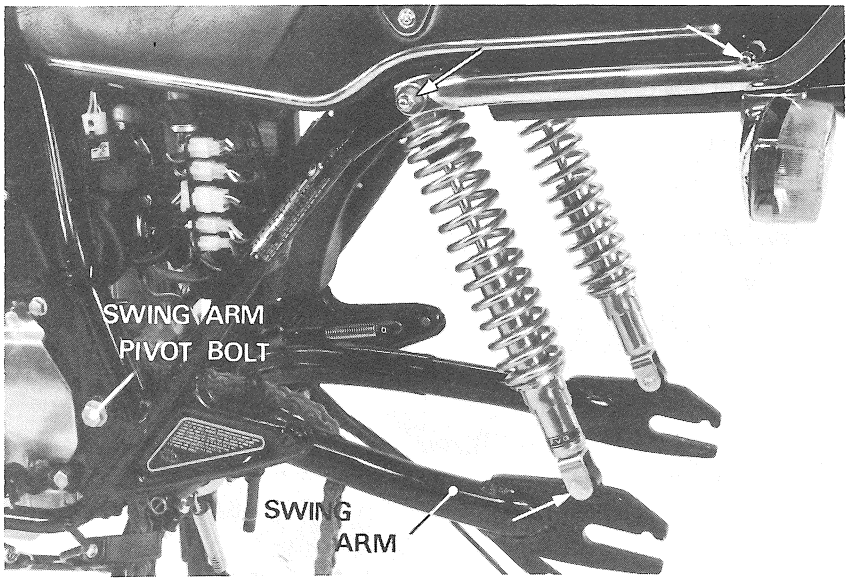

SWING ARM DISASSEMBLY/ ASSEMBLY

NOTE

Drive the bushings into place, with a soft hammer, making sure that they are not damaged.
Lubricate with grease after installation.

SWING ARM BUSHING I.D. SERVICE LIMIT:
21.7 mm (0.854 in)
SWING ARM COLLAR O.D. SERVICE LIMIT:
21.4 mm (0.843 in)

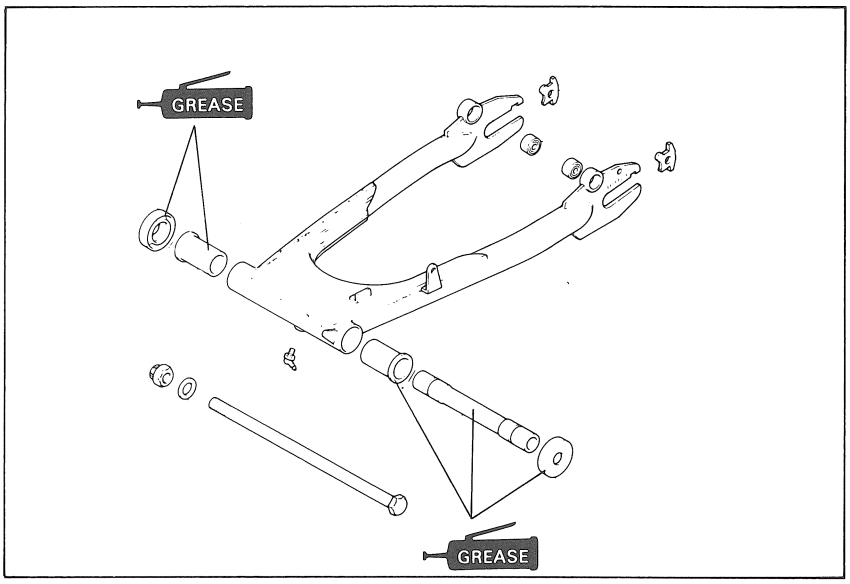

SWING ARM INSTALLATION

Place the drive chain over the swing arm.
Tighten the swing arm pivot bolt.

TORQUE: 5.5–7.0 kg-m (40–51 ft-lb)

Install the shock absorbers.

TORQUE:
UPPER: 2.0–3.0 kg-m (14–22 ft-lb)
LOWER: 3.0–4.0 kg-m (22–29 ft-lb)

Install the rear wheel.
Install the mufflers.

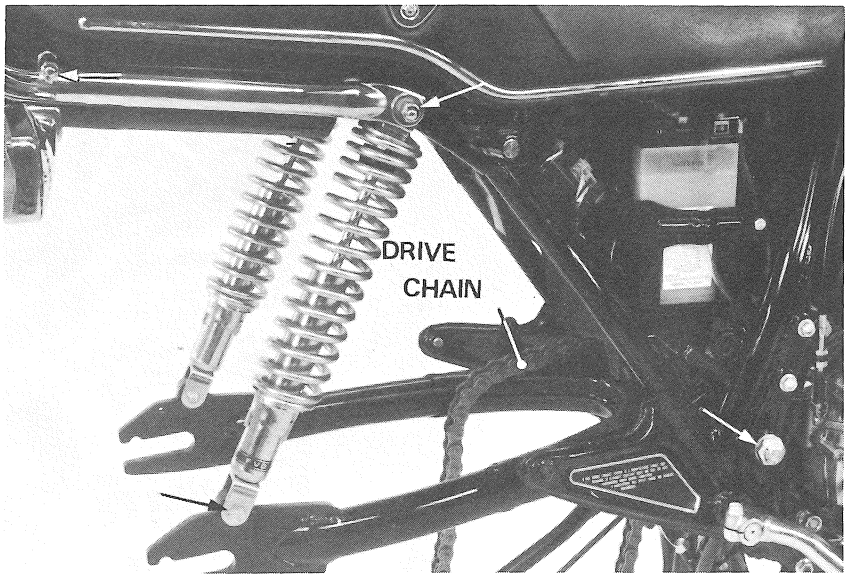

Date of Issue: August, 1978

MEMO