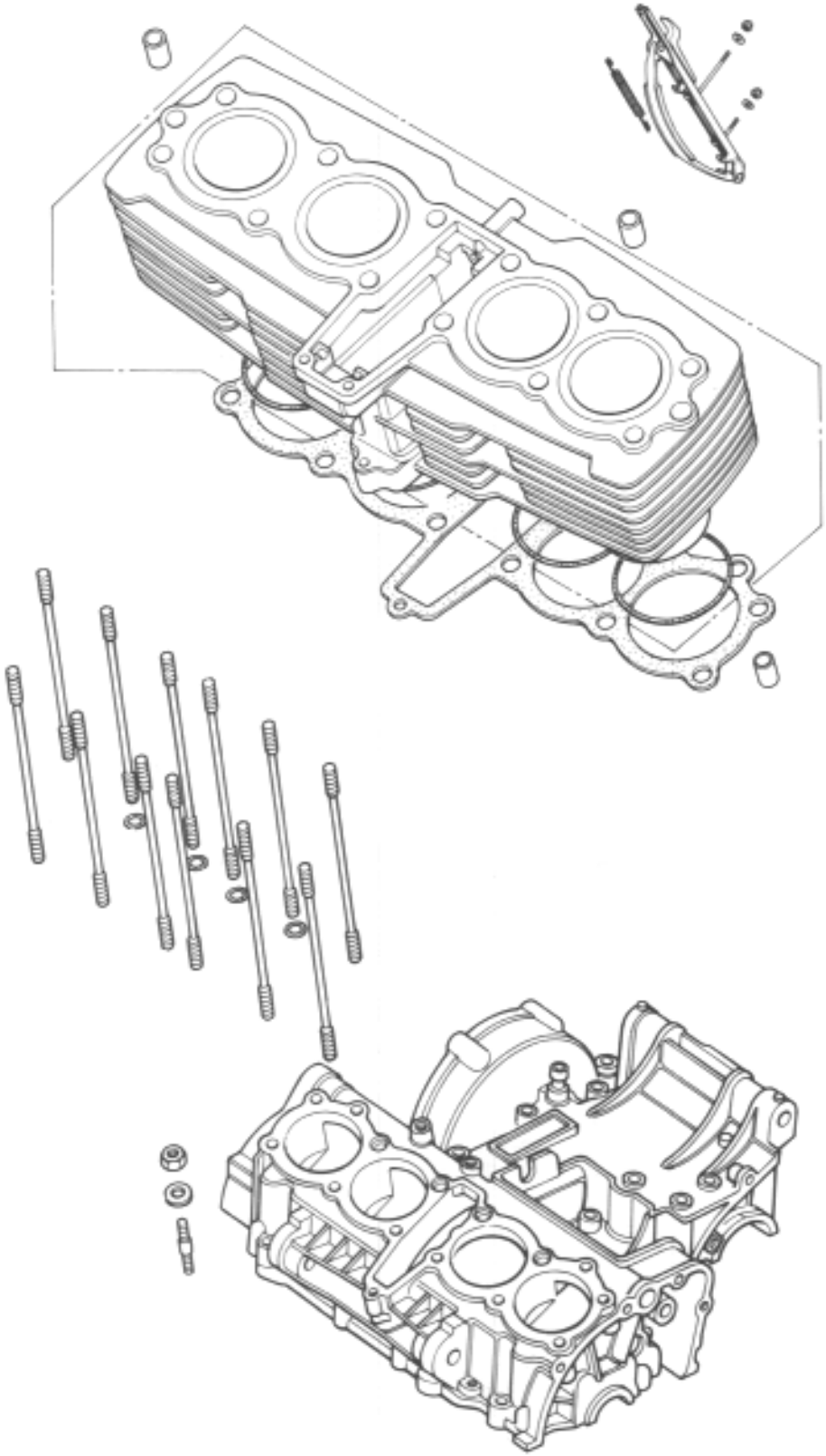

Date of Issue: August, 1978
© HONDA MOTOR CO., LTD.

7. CYLINDER/PISTON

SERVICE INFORMATION	7–1	PISTON REMOVAL	7–3
TROUBLESHOOTING	7–1	PISTON INSTALLATION	7–7
CYLINDER REMOVAL	7–2	CYLINDER INSTALLATION	7–7

SERVICE INFORMATION

GENERAL INSTRUCTIONS

All cylinder/piston maintenance and inspection can be accomplished with the engine removed.

SPECIAL TOOLS

Special Tools

Piston Base (2 required)	07958–2500001
Piston Ring Compressor (2 required)	07954–3000000

SPECIFICATIONS

			STANDARD	SERVICE LIMIT
Cylinder	I.D.		62.000–62.010 mm (2.4409–2.4413 in)	62.10 mm (2.445 in)
	Warpage		———	0.10 mm (0.004 in)
Piston, piston rings and piston pin	Piston ring-to-ring groove clearance	TOP	0.030–0.065 mm (0.0012–0.0026 in)	0.09 mm (0.004 in)
		SECOND	0.025–0.055 mm (0.0010–0.0022 in)	0.09 mm (0.004 in)
	Ring end gap	TOP	0.10–0.30 mm (0.004–0.012 in)	0.5 mm (0.020 in)
		SECOND	0.10–0.30 mm (0.004–0.012 in)	0.5 mm (0.020 in)
		OIL (SIDE RAIL)	0.3–0.9 mm (0.012–0.035 in)	1.1 mm (0.043 in)
	Piston O.D.		61.95–61.98 mm (2.439–2.440 in)	61.90 mm (2.437 in)
	Piston pin bore		15.002–15.008 mm (0.5906–0.5909 in)	15.05 mm (0.593 in)
	Connecting rod small end I.D.		15.016–15.034 mm (0.5912–0.5919 in)	15.07 mm (0.593 in)
	Piston pin O.D.		14.994–15.000 mm (0.5903–0.5906 in)	14.98 mm (0.590 in)
	Piston-to-piston pin clearance		———	0.04 mm (0.002 in)
	Cylinder-to-piston clearance		———	0.10 mm (0.004 in)

TROUBLESHOOTING

Compression low
1. Worn cylinder or piston rings

Excessive smoke
1. Worn cylinder or piston
2. Improper installation of piston rings
3. Scored or scratched piston or cylinder wall

Overheating
1. Excessive carbon build-up on the piston or combustion chamber wall.

Knocking or abnormal noise
1. Worn piston and cylinder
2. Excessive carbon build-up

Date of Issue: August, 1978
© HONDA MOTOR CO., LTD.

CYLINDER REMOVAL

Remove the cylinder head (Section 6).
Remove the bolt at the lower front cylinder base.
Remove the cylinder.
Remove the cam chain tensioner from the cylinder.

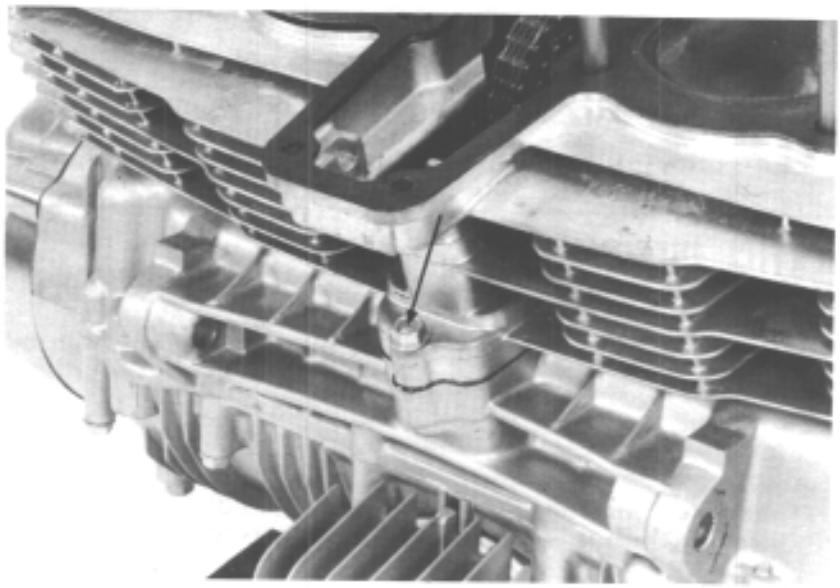

Remove the cylinder gasket and dowel pins.

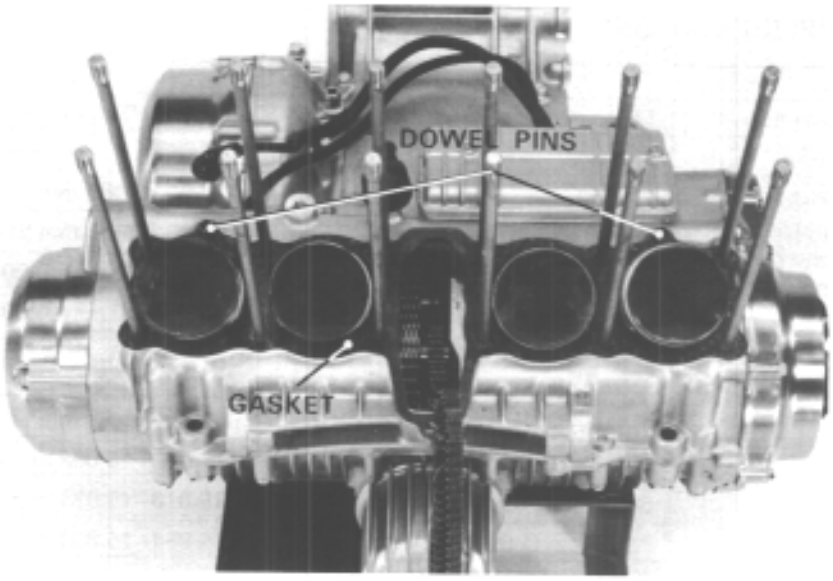

CYLINDER INSPECTION

Inspect the cylinder bores for wear or damage.
Measure the cylinder I. D. at three levels in X and Y axis.

SERVICE LIMIT: 62.10 mm (2.445 in)

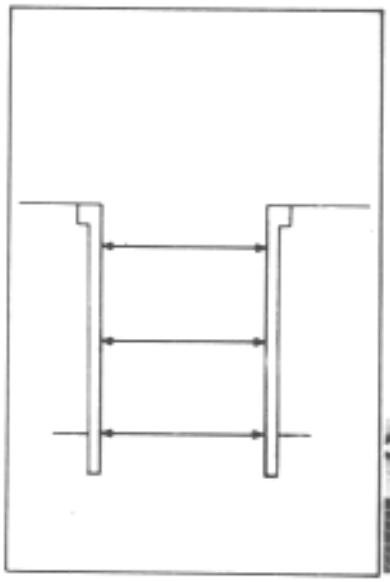

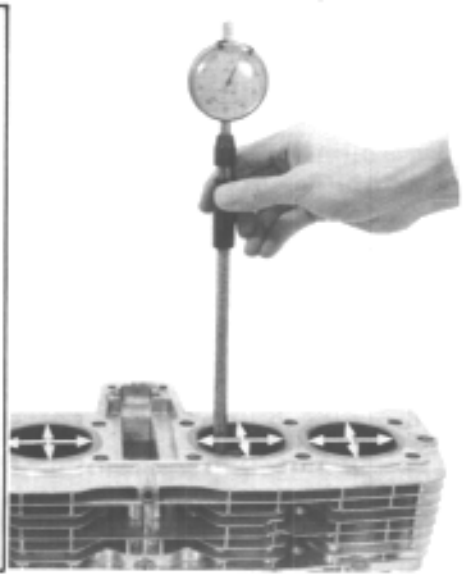

Date of Issue: August, 1978
© HONDA MOTOR CO., LTD.

Inspect the top of the cylinders for warpage.
Check in an X pattern as shown.

SERVICE LIMIT: 0.10 mm (0.004 in)

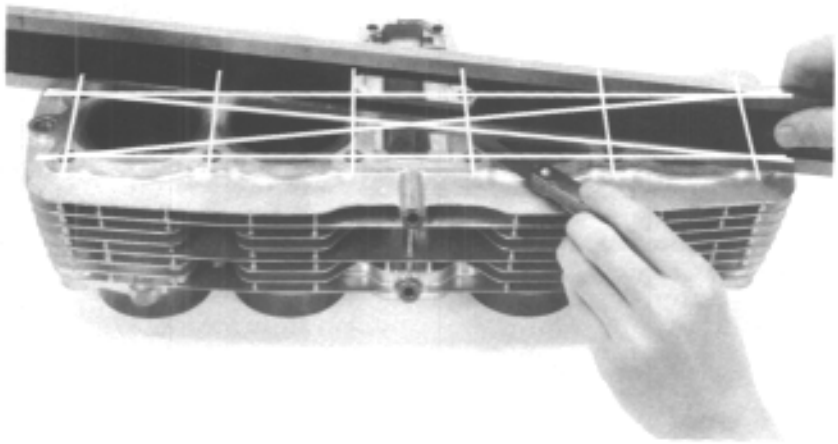

CAM CHAIN TENSIONER INSPECTION

Inspect the slipper of the cam chain tensioner for damage or excessive wear.
Inspect the tension spring for weakness.

PISTON REMOVAL

Remove each piston pin clip with needle nose pliers.

NOTE

Do not allow clips to fall into the crankcase.

Press the piston pin out.

NOTE

Mark the pistons to indicate the cylinder positions.

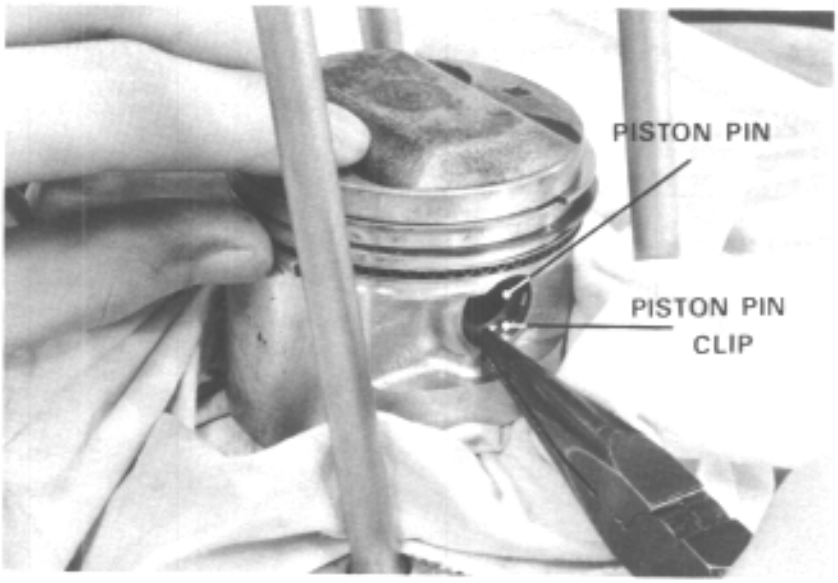

© HONDA MOTOR CO., LTD.

PISTON/PISTON RING INSPECTION

Inspect the piston ring-to-groove clearance.

SERVICE LIMIT:

TOP:	0.09 mm (0.004 in)
SECOND:	0.09 mm (0.004 in)

NOTE

Mark the rings so that they can be returned to their original locations.

Inspect the pistons for damage and cracks; ring grooves for wear.

Insert each piston ring into the cylinder, and inspect the end gap.

SERVICE LIMITS:

TOP:	0.5 mm (0.020 in)
SECOND:	0.5 mm (0.020 in)
OIL (Side rail):	1.1 mm (0.043 in)

STANDARD END GAPS:

TOP:	0.10–0.30 mm (0.004–0.012 in)
SECOND:	0.10–0.30 mm (0.004–0.012 in)
OIL (Side rail):	0.3–0.9 mm (0.012–0.035 in)

Measure the piston O. D. at the skirt.

SERVICE LIMIT: 61.90 mm (2.437 in)

NOTE

Measurements should be taken 10 mm (0.4 in) from the bottom.

Calculate the cylinder-to-piston clearance.

SERVICE LIMIT: 0.1 mm (0.004 in)

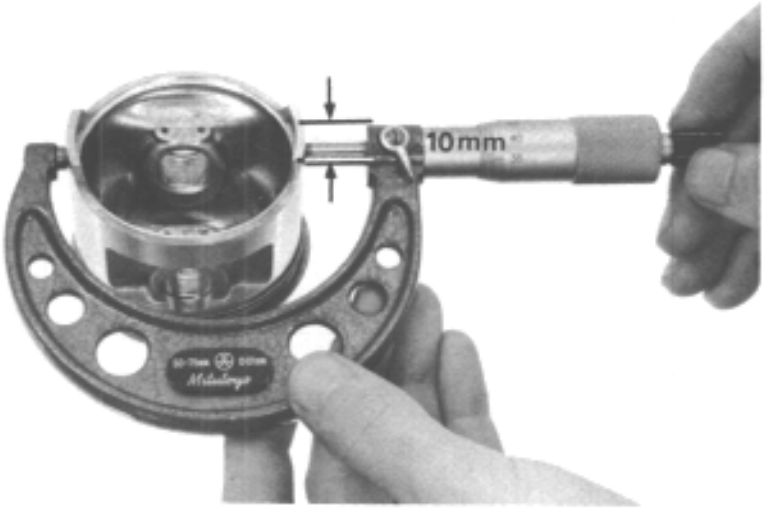

Date of Issue: August, 1978
© HONDA MOTOR CO., LTD.

Measure the piston pin hole I. D.,

SERVICE LIMIT: 15.05 mm (0.593 in)

Measure the connecting rod small end I. D.,
(See Section 12 for replacement procedure)

SERVICE LIMIT: 15.07 mm (0.593 in)

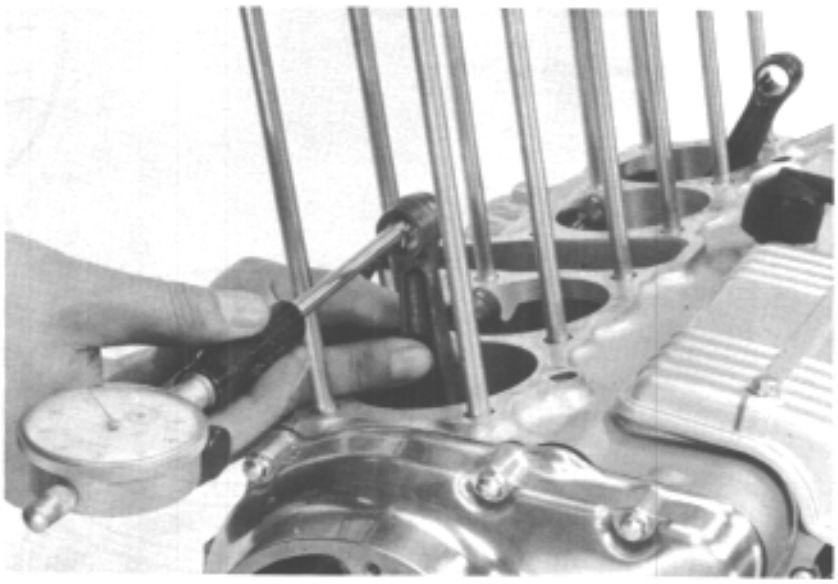

Measure the piston pin O. D.,

SERVICE LIMIT: 14.98 mm (0.590 in)

Determine the piston-to-piston pin clearance,

SERVICE LIMIT: 0.04 mm (0.002 in)

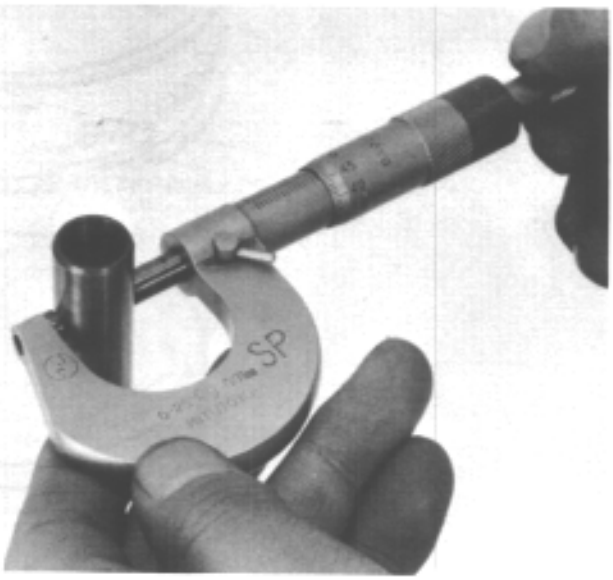

© HONDA MOTOR CO., LTD.

PISTON RING INSTALLATION

Install the piston rings.

NOTE

- All rings should be installed with the markings facing up.
- After installation, the rings should rotate freely.

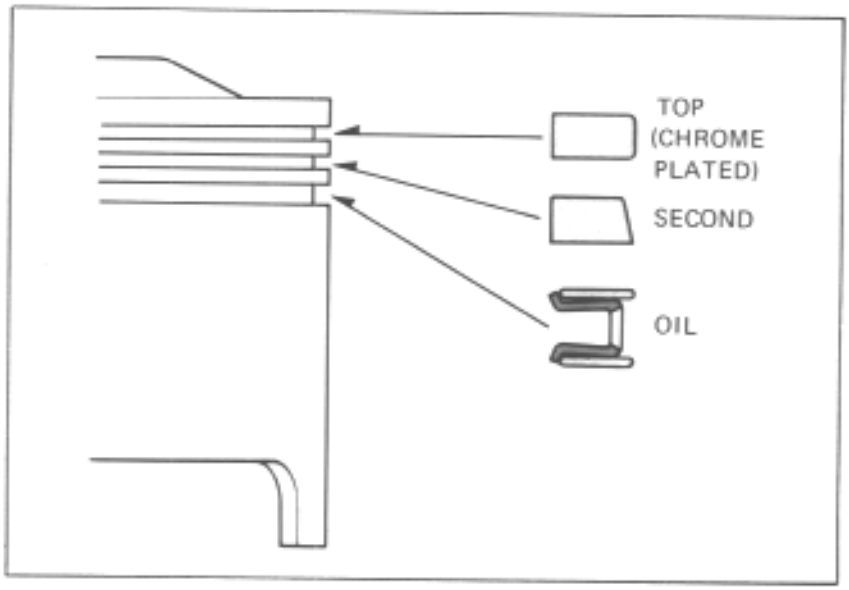

Space the piston ring end gaps 120 degrees apart.
Do not align the gaps in the oil rings.

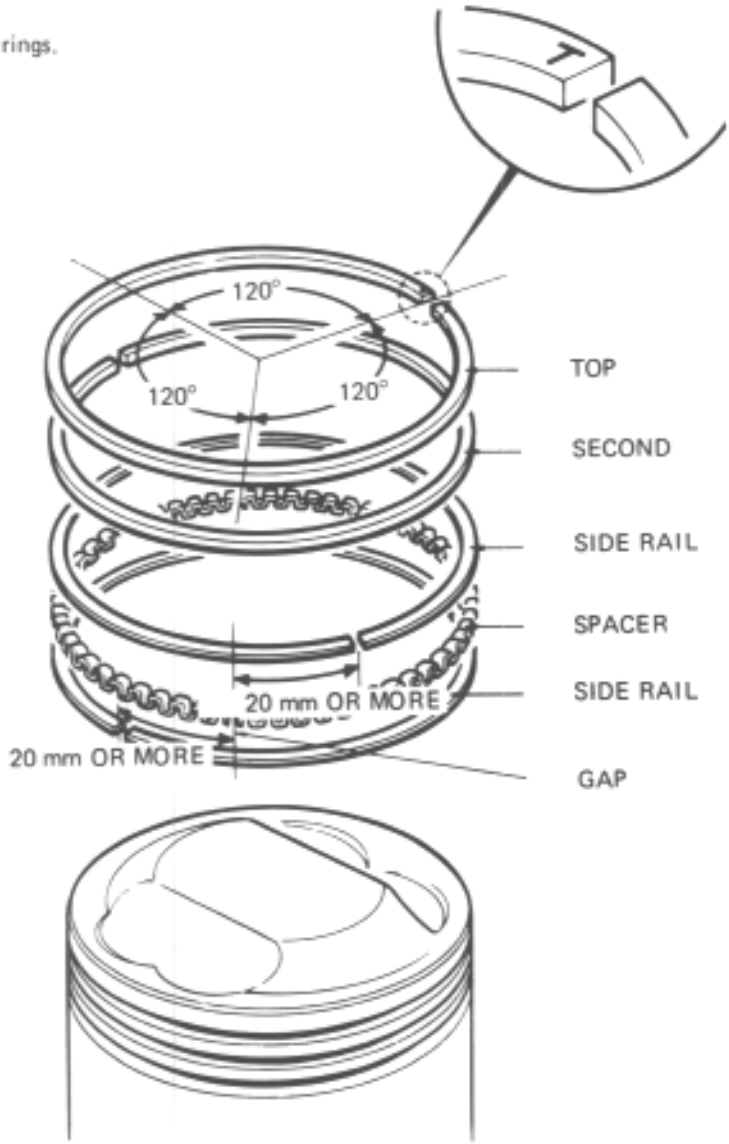

Date of Issue: August, 1978
© HONDA MOTOR CO., LTD.

PISTON INSTALLATION

Apply molybdenum disulfide grease to the connecting rod small ends.
Install the pistons, piston pins and clips.

NOTE

- Position the mark "IN" on the piston to the intake side.
- Install the pistons in their original positions.
- Do not allow piston pin clips to fall into the crankcase.

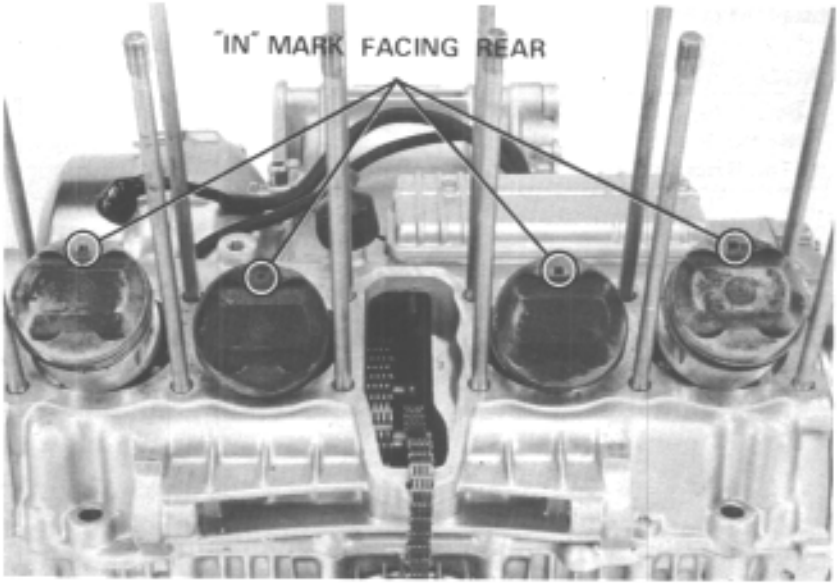

CYLINDER INSTALLATION

Install the cam chain tensioner.

Install the dowel pins and gasket.

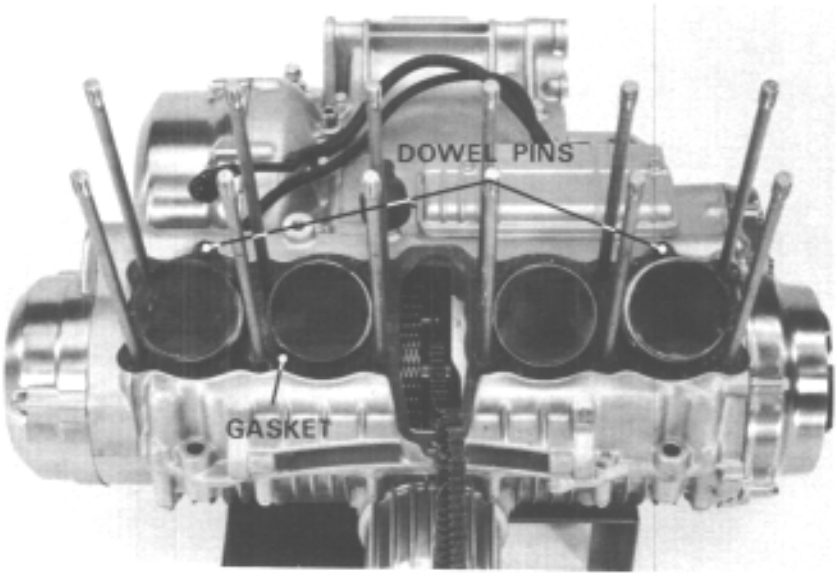

© HONDA MOTOR CO., LTD.

Install the cylinder.

NOTE

Before using the special tools, position the No. 2 and No. 3 pistons at T. D. C. (Top Dead Center).

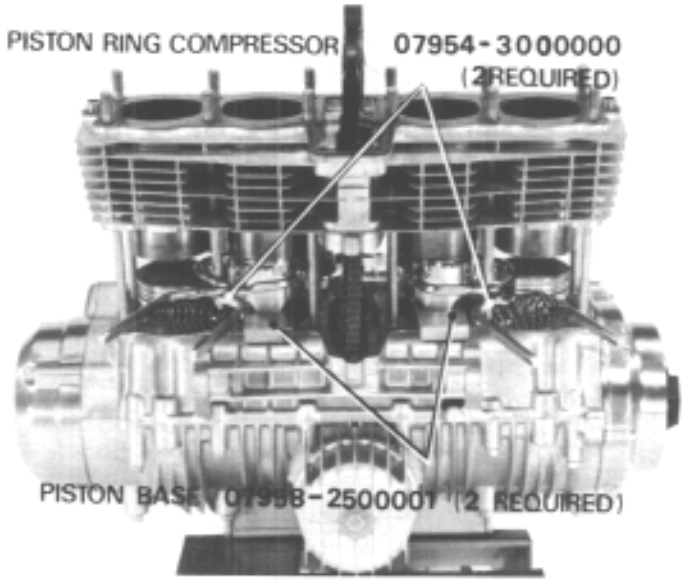

Tighten the cylinder base nut securely after installation.

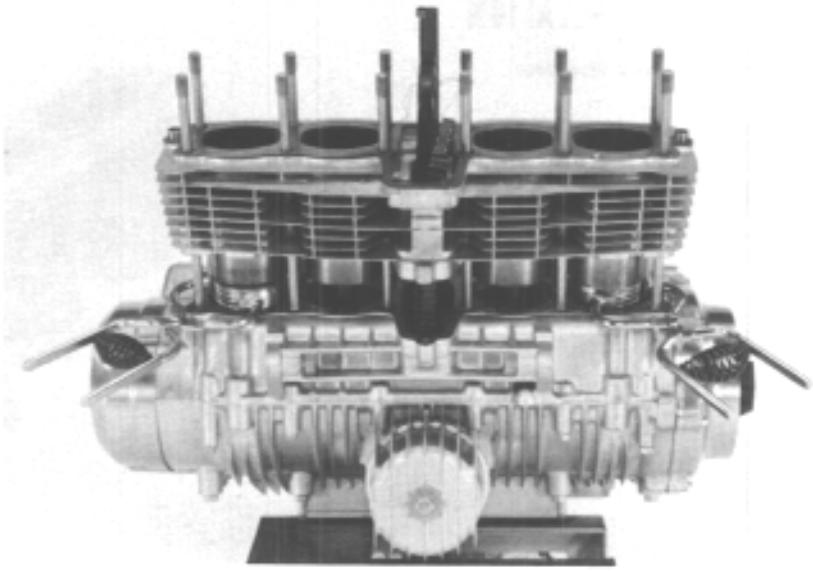

Date of Issue: November, 1979
© HONDA MOTOR CO., LTD.

MEMO

© HONDA MOTOR CO., LTD.